Legal Protection of Digital Property

Lecture 8

Kevin K H Pun

PhD(Computer Science) LLM(Intellectual Property)
Department of Computer Science

Patent

- monopoly right in an invention to exploit it and stop others from exploiting it without consent

- to "exploit" (in context of patent) includes manufacture, sell, use, import, assign and license

- differences with copyright
  - patent protects "inventions" (including ideas capable of industrial application), which must be new and not obvious
  - patent requires formal application disclosing details of the invention and specifying the scope of monopoly rights claimed
  - patent may stop others from using or making the invention even though the latter have arrived at the invention independently

NB. Patent is also territorial.

Patent Application

- application must include
  - "description" of the invention, and
  - "claims" of monopoly rights
- description must disclose the invention sufficiently clear and complete
- claims must be clear and concise and supported by the description

US007395773B1

(12) **United States Patent**
Finefield

(10) **Patent No.: US 7,395,773 B1**
(45) **Date of Patent: Jul. 8, 2008**

(54) **MULTI-PART BOAT**

(76) Inventor: **Kenneth Finefield**, 722 S. Orange Ave., Santa Ana, CA (US) 92701

(*) Notice: Subject to any disclaimer, the term of this patent is extended or adjusted under 35 U.S.C. 154(b) by 0 days.

(21) Appl. No.: **11/749,089**

(22) Filed: **May 15, 2007**

(51) **Int. Cl.**
B63B 7/04 (2006.01)
B63B 3/08 (2006.01)

(52) **U.S. Cl.** **114/352**

(58) **Field of Classification Search** ..... 114/77 R, 114/77 A, 352–354
See application file for complete search history.

(56) **References Cited**

U.S. PATENT DOCUMENTS

1,449,222	A		3/1923	Goethel	
2,584,685	A	*	2/1952	Evert	114/352
3,090,973	A	*	5/1963	Levinson	114/344
3,614,938	A	*	10/1971	Statile	114/248
3,822,427	A	*	7/1974	Ewart, Jr.	114/352
3,916,468	A		11/1975	Tetreault et al.	
D259,927	S	*	7/1981	Norlund	D12/310
4,718,587	A	*	1/1988	Roberts	224/328
4,790,256	A	*	12/1988	Levine	114/352
5,261,346	A	*	11/1993	Updyke	114/352
5,301,629	A	*	4/1994	Kleyh et al.	114/352
5,349,918	A	*	9/1994	Elie	114/352

FOREIGN PATENT DOCUMENTS

AU	2004100379	A4	*	6/2004
GB	2090563	A	*	7/1982
WO	WO 2004089737	A1	*	10/2004

* cited by examiner

Primary Examiner—Ajay Vasudeva
(74) *Attorney, Agent, or Firm*—QuickPatents, Inc.; Kevin Prince

(57) **ABSTRACT**

A multi-part boat includes a plurality of substantially hollow hull sections with at least one end of each section being attachable to one end of another section, with at least one bulkhead attachment means comprising a groove portion and a tongue portion. Hull sections include a bow section, a middle section, and a stern section. The bow section and the stern section can at least partially fit within the middle section when the boat is in a disassembled configuration. The bottom side of the hull sections includes a keel that partially overlaps an adjacent hull section and include a cooperating keel that is shorter than the length of the bottom side thereof by the amount of overlap of the keel. The tongue portion includes a locking means which further includes a tapered shim for frictionally locking the tongue portion to the groove portion. The tapered shim further includes an elongated aperture and a handle whereby the handle can be pivoted between a locked and an unlocked position.

4 Claims, 14 Drawing Sheets

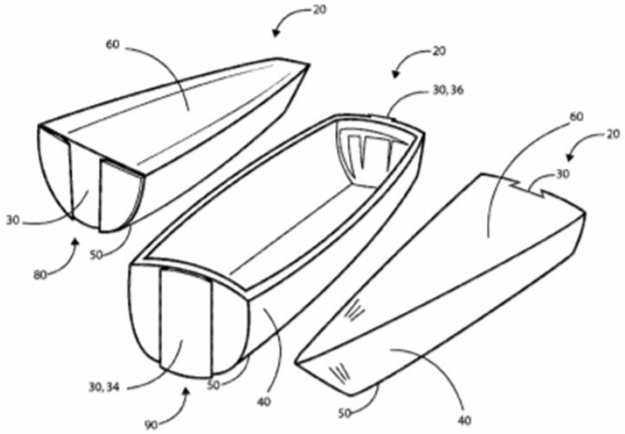

What is claimed is:

1. A boat comprising:

a plurality of substantially hollow hull sections, each section having at least one bulkhead side, at least one peripheral side, a bottom side, and a top side, the plurality of hull sections including a bow section, a middle section, and a stern section, the middle section including a forward bulkhead side for attaching to the bow section, a rear bulkhead side for attaching to the stern section, and a substantially open top side;

at least one bulkhead attachment means comprising a groove portion and a tongue portion, each tongue portion for slidable mutual engagement to one of the groove portions, each portion fixed to one of the at least one bulkhead sides of one of the hull sections; one of the tongue portions including a locking means for selectively locking each tongue portion to the groove portion, at least one of the hull sections including a keel on the bottom side thereof that partially overlaps an adjacent hull section when the two hull sections are fixed together by the bulkhead attachment means;

whereby the boat may be assembled by slidably engaging each tongue portion of one of the plurality of hull sections to one of the groove portions of one of the other hull sections and locking each hull section together with the locking means, the keel acting as a stop for preventing slidable engagement of the two hull sections beyond a point of proper coaxial alignment thereof.

2. The boat of claim **1** wherein the adjacent hull section includes a cooperating keel that is shorter than the length of the bottom side thereof by the amount of overlap of the keel of the one hull section, whereby when the two hull sections are fixed together by the bulkhead attachment means the keel of the one hull section becomes co-aligned and abutted with the keel of the adjacent hull section.

3. A boat comprising:

a plurality of substantially hollow hull sections, each section having at least one bulkhead side, at least one peripheral side, a bottom side, and a top side;

at least one bulkhead attachment means comprising a groove portion and a tongue portion, each tongue portion for slidable mutual engagement to one of the groove portions, each portion fixed to one of the at least one bulkhead sides of one of the hull sections; one of the tongue portions including a locking means for selectively locking each tongue portion to the groove portion, the locking means including a tapered shim that may be selectively forced between each tongue and groove portion for frictionally locking the tongue portion to the groove portion;

whereby the boat may be assembled by slidably engaging each tongue portion of one of the plurality of hull sections to one of the groove portions of one of the other hull sections and locking each hull section together with the locking means.

4. The boat of claim **3** wherein each tapered shim includes an elongated aperture and is slidably held along a substantially vertical plane by a bolt means to one tongue portion, and wherein each tapered shim further includes a handle pivotally fixed to the one tongue portion at a pivoted end thereof, the handle pivotally fixed to a top portion of the shim, whereby the handle may be pivoted between a locked and an unlocked position, the lock position forcing the shim between one of the tongue and groove portions for frictionally locking the tongue portion to the groove portion.

* * * * *

NB. When a patent application is published, it forms part of the "state of the art". State of the art is important in deciding whether to grant patent to an invention (more later).

NB. If a patent is granted, its claims will define the scope of the patentee's monopoly. A person will infringe the patent if what he does falls within the claims.

- 2 categories of claims in an application
  - product (or "substance") claim eg. new device, new material
    - » prevents others from making, selling, importing, using or stocking the product
  - process (or "method", or "use") claim eg. new way of making rubber, new use of a chemical
    - » prevents others from using the process; and
    - » prevents others from selling, importing, using or stocking any product obtained **directly** by the process

What is this claim?

- A hand-held writing instrument comprising:
  - (a) an elongated core-element that will leave a marking line if moved across paper or other similar surface, and
  - (b) an elongated holder surrounding and encasing the elongated core element, one portion of the holder being removable from an end so as to enable the core-element to be exposed for writing,

whereby the holder protects the core element from breakage and provides an enlarged means for holding the core-element conveniently.

Q: Product claim or process claim?

What about this?

- A method for joining two pieces of cloth together at their edges, comprising the steps of:
  - (a) providing the two pieces of cloth and positioning them together so that an edge portion of one piece overlaps an adjacent edge portion of the other piece, and
  - (b) passing a thread repeatedly through and along the length of the overlapping portions in sequentially opposite

directions and through sequentially spaced holes in the overlapping adjacent portions,

whereby the two pieces of cloth will be attached along said edge portions.

NB. The above examples are "independent claims"

- **no reference to any other claims in the <u>same category</u> (product or process);**
- **set out all essential features of the invention.**

NB. Another type of claim is "dependent claim"

- **a claim which references at least 1 other claim in the same category ("parent claim(s)");**
- **sets out additional limitation to the parent claim(s) ie. dependent claim = proper subset of its parent(s)**

NB. A patent application generally consists of at most 1 independent claim in each category, each possibly followed by a number of dependent claims.

NB. Having ≥ 2 independent claims in same category may be allowed if they are closely "interrelated" ie. complement each other or work closely together eg.

- **claims for a group of chemical compounds;**
- **claims for two or more processes for the manufacture of compound X;**
- **claims directed to the use of chemical compound Y for multiple purposes;**
- **claims for plug and socket;**
- **claims for transmitter and receiver**

Example of claims

Claim 1: a chair having only two legs.

Claim 2: the chair of claim 1, further comprising at least one leg made of wood.

Claim 3: the chair of claim 2, wherein at least a portion of the chair is covered with a fabric.

Claim 4: the chair of claim 3, …. [further limitations].

Claim 5: a method of making a chair of only two legs comprising steps A and B.

Claim 6: the method of claim 5, further comprising the step of C.

Claim 7: the method of claim 6, further comprising the step D.

Q: Which are independent claims? Which are dependent claims?

NB. Independent claim offers the broadest scope of protection.

NB. Dependent claims provide fallback positions during patent application and litigation. Eg. if claim 1 is invalidated because too broad, may rely on claim 2 which then becomes the independent claim and is narrower in scope.

Q: Is algorithm a product? Or process? What about computer program?

NB. Process claim for computer program is likely same as process claim for the algorithm.

NB. Product claim for computer program must set out the essential components and/or functionalities of the program.

E1: X has devised a new and ingenious algorithm for recognising human face, and has written a program implementing it. The program is built into a device for face recognition. What are the possible claims X can make in its patent application?

Patent System in HK

- governed by the Patents Ordinance (Cap 514) enacted on 29 May 1997 with effect from 27 June 1997

NB. Hereinafter, references to sections are references to the Patents Ordinance unless stated otherwise.

- two types of patent in HK:
  - short-term patent (8 years protection)
  - standard patent (20 years protection)

  NB. Short-term patent will not be covered in this course.

- two types of standard patent (with effect from 19/12/2019)
  - apply in HK (standard patent (O))
  - apply to a "designated patent office" then register in HK (standard patent (R))

  NB. O = Original grant; R = Re-registration.

Application Procedure for a Standard Patent (R) in HK

At the DPO

Patent application

Search & publication

Substantive examination

Grant of patent

In HK

Within 6 months from date of publication: s.15

Request to record DPO application

Stage One

Formalities check

Publication of request to record

Advertisement in Official Journal

Entry onto Register

Within 6 months from grant in DPO: s.23

Request for registration & grant

Stage Two

Formalities check

Grant of patent

Publication of patent (specification & details)

Advertisement in Official Journal

Issue of Certificate

- "designated patent offices"
  - State Intellectual Property Office (SIPO)
    - » under PRC Patent Law
  - UK IP Office (UKIPO)
    - » under UK Patents Act 1977
  - European Patent Office (EPO), in respect of patents designating the UK
    - » under European Patent Convention

NB. Date of filing at designated patent office is called "deemed date of filing".

- HK patent office and designated patent offices all adopt "first to file" system: if 2 applicants compete for the same patent, the first to file has the right to be granted patent: Patents Ordinance, s.9E(3)

- patent applications may be withdrawn any time before grant

- Paris Convention for the Protection of Industrial Property, Art 4:
  - patent applications by the same applicant for the same invention in different member countries within 12 months from the date of filing the 1st application deemed to be filed at the same date as the 1st application **("date of priority")**
- cf. Patents Ordinance, s.37C

NB. Date of priority is important! (more later)

NB. If a patent application is already published, it will be part of the "state of the art". This is so even if the application is withdrawn later.

NB. May take 24 to 48 months from filing in PRC or UK to finally being granted a standard patent in HK!

NB. PRC Patent Law covers industrial designs ("design patents"). Same in US. (The legal battle on smart phone between Apple and Samsung was partly concerned with design patents).

NB. HK and UK do not protect industrial designs by patent but as "registered designs": cf. Registered Designs Ordinance (Cap 522).

Term of Standard Patent: s.39

- patent takes effect from date of advertising the grant in official journal and expires exactly 20 years from
  - **[for standard patent (R)]** filing date in the designated patent office (ie. deemed date of filing);
  - **[for standard patent (O)]** filing date at the Registrar of Patents in HK

NB. Patent must be maintained by payment of renewal fees (initial 3 yrs + annual renewal).

NB. Any person can apply to revoke a patent after grant, but only on limited grounds: s.91. One important ground is the invention is not patentable ie. should not have been granted a patent in the 1st place.